GENERAL DRAWING

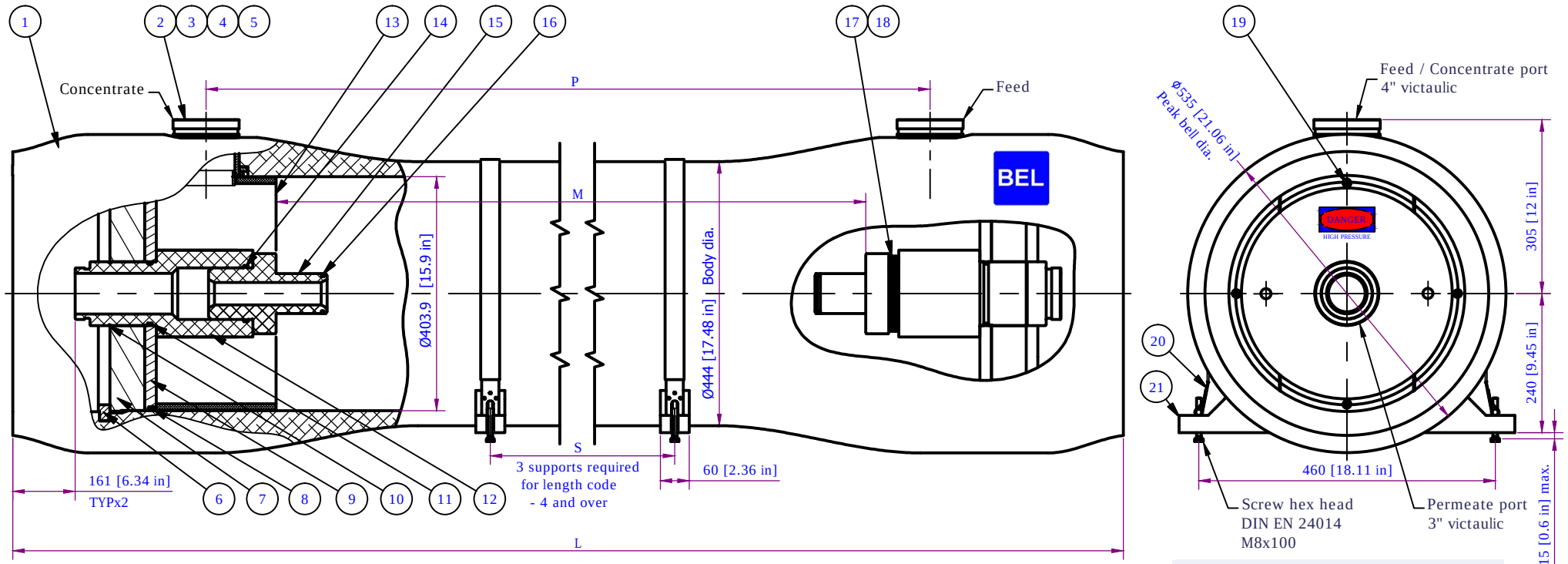

Item	Part number	Q-ty	Title	Material
1	16-4-1000	1	Body of PV	GFRP
2	044-405-1201	2	Side port 4"	Super duplex stainless steel
3	285772409	4	Retaining ring	Stainless steel
4	006-406-1205	2	Disk for port	Stainless steel
5	014-400-0709	2	Seal for port	EPDM
6	005-661-1200	2	Support ring	Aluminum
7	003-165-1200	2	Base plate	Aluminum
8	007-402-0084	2	Seal for S.plate	EPDM
9	013-165-1200	2	Sealing plate	Engineering plastic
10	011-420-1202	2	Retaining ring	Stainless steel
11	007-112-0053	2	Seal for P.port	EPDM
12	008-160-1204	2	Permeate port	Engineering plastic
13	004-165-1041	1	Thrust ring	Engineering plastic
14	007-085-0053	2	Seal for adapter	EPDM
15	As required	2	Adapter	Engineering plastic
16	As required	2	Membrane seal	EPDM
17	010-160-9001	3	Spacer 1mm.	Engineering plastic
18	010-160-9005	2-8	Spacer 5mm.	Engineering plastic
19	016-002-0845	8	Socket screw	Stainless steel
20	015-160-0000	2	Strap assy.	Stainless steel
21	012-160-0000	2-3	Saddle	Engineering plastic
22				
23				
24				

This drawing is an integral part of the general statement of use and technical manual

Shell length code	L (l.o.a.), mm. / inch	P, port to port mm. / inch	M, length for membrane elements, mm. / inch	S # (span) mm. / inch	W weight kg. / lb.
1	2279	1407	1107	700	380
	89.72	55.39	43.6	27.6	838
2	3311	2439	2139	1700	435
	130.35	96.02	84.2	66.9	960
3	4343	3471	3171	2700	491
	170.98	136.65	124.8	106.3	1082
4	5375	4503	4203	3420	546
	211.61	177.28	165.5	134.6	1203
5	6407	5535	5235	4450	601
	252.24	217.91	206.1	175.2	1325
6	7439	6567	6267	5470	656
	292.87	258.54	246.7	215.4	1447
7	8471	7599	7299	6500	711
	333.50	299.17	287.4	255.9	1569
8	9503	8631	8331	7530	767
	374.13	339.80	328	296.5	1690

LENNTECH
info@lenntech.com Tel. +31-152-610-900
www.lenntech.com Fax. +31-152-616-289

Notes:

1. All dimensions are for reference only, not for construction unless certified. Dimensions L, P, M can be varied according to exact membrane type.
2. Item 17 & 18 should be located on feed side for membranes shimming.
3. Item 13 downstream only.
4. Item 19 - closing torque not to exceed 2 Nm.
5. Drawing unit: mm. (inches).
6. Saddles can be shimmed if required.
7. The vessel is supplied with two straps for external saddles.
8. Do not scale drawing, may be reprinted on any paper size or copied.

Warning.

1. Never pressurize a pressure vessel that was not loaded with membrane elements.
2. Wrong manifolding may cause an excessive pressure on port what can lead to leaks.
3. Max. allowable working pressure not to exceed 1000 psi. (69 bar).
4. Permeate internal pressure not to exceed 125 psi. (8.6 bar).
5. Operating temperature not to exceed 49°C (120°F).

BEL	TITLE BEL 16-s(2x4)-1000 psi. RO PRESSURE VESSEL	DESIGN	Daria P.	15/08/2014
		CHECK	Yuri V.	15/08/2014
DRAWING №.	16s4-1000	APPR.	Ari A.	15/08/2014
		Sheet 1 Of 1		REV.: 0

THIS DRAWING IS PROPERTY OF BEL GROUP LIMITED IT IS STRICTLY FORBIDDEN TO USE, COPY, REPRODUCE OR DISCLOSE ANY PART OF IT TO THIRD PARTY WITHOUT WRITTEN AUTHORIZATION.